FIXED CALIPER

P4 30/34 C

20.5165.58/68

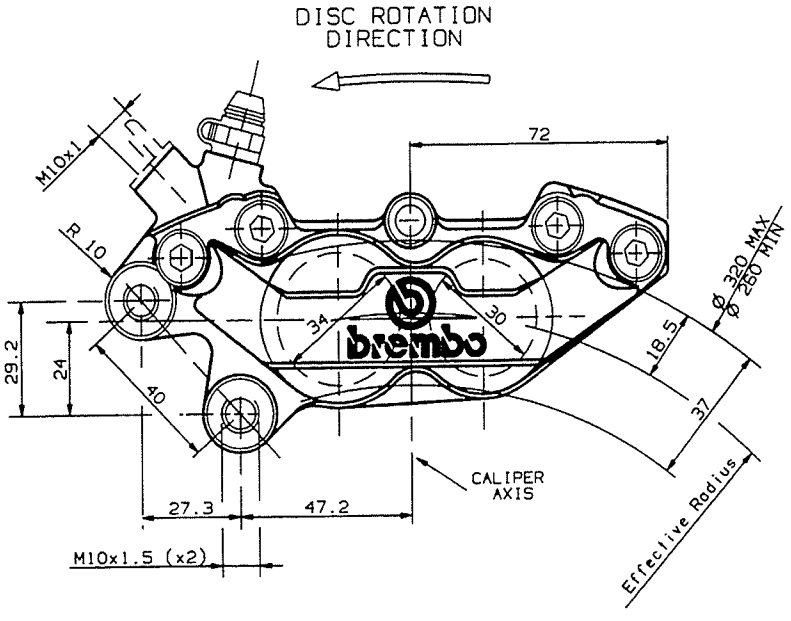

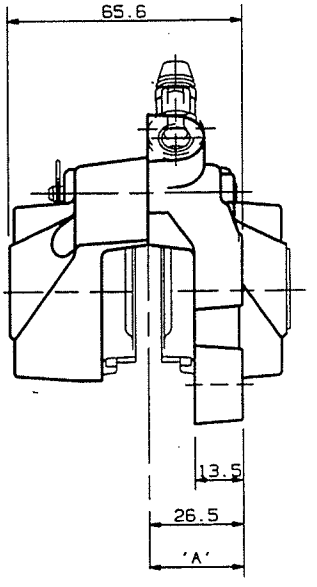

DESCRIPTION

Fixed caliper with 4 opposed pistons, realized by semicalipers joined by bolts.
Pads are supported by one pin.
Construction Material: Aluminium Alloy.
Operating fluid: brake fluid DOT4.

N.B.: drawing shows left side caliper.
Code 20.5165.58
Code 20.5165.68 specular.
Mounting side behind the fork.

PADS SHAPE AND DIMENSIONS

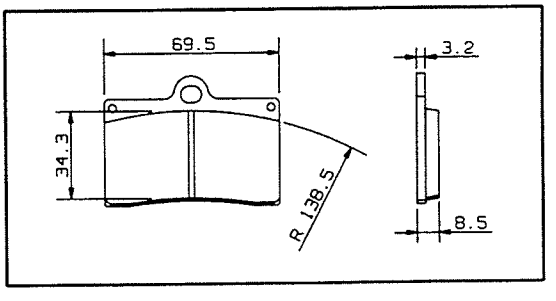

TECHNICAL CHARACTERISTICS

Pistons number and diameter: 4	30/34 mm
MAX working pressure:	70 bar
A) Disc position (TOLERANCE):	
Disc thickness 5.0 mm	±0.7 mm
Disc thickness 4.0 mm	±0.7 mm
Average pad surface (1 pad):	23.6 cm²
Weight (with not sintered pad):	0.880 Kg

CONFIGURATION

CODE CALIPER / CHARACT.	PADS FRICTION MATERIAL	BODY COLOR	MOUNT. SIDE	USABLE DISCS THICKNESS	BRAKE FLUID FOR PADS WEAR
20.5165.58/68	FERIT I/D 450 FF	GOLD	SX DX	5.0 mm 4.0 mm	14.85 cm³

AVAILABLE SPARE PARTS

CODE CALIPER / SPARE PARTS	PADS	BLEEDER SCREW	DUST COVER	PIN	PAD SPRING
20.5165.58/68	107.4426.45	105.3387.60	105.1502.20	120.3204.33	120.4196.85

Indicating informations subject to modification.
For further specifications contact Technical Section.

LAST UPDATE: 13/06/1996